RS Procedure 2015_13

Dec'15

2015

Ejector belt position replacement procedure for Alpha I series model Roboshot machines

[Ejector axis belt replacement procedure]

Tools Required:-

a) **Belt Tension meter**
b) Torque wrench set
d) Depth Gauge

Step-1

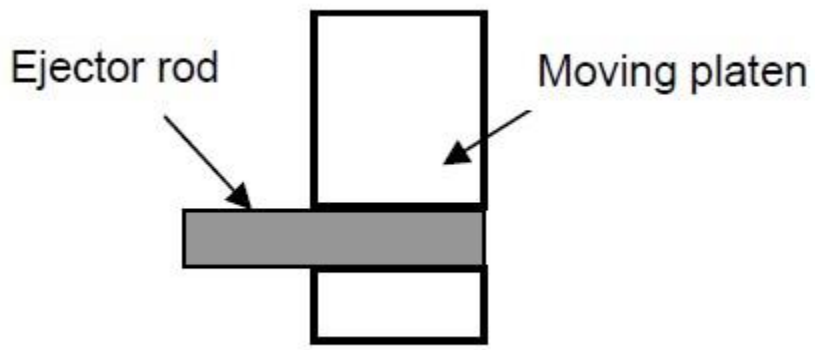

1) **Correct ejector guide rod position**

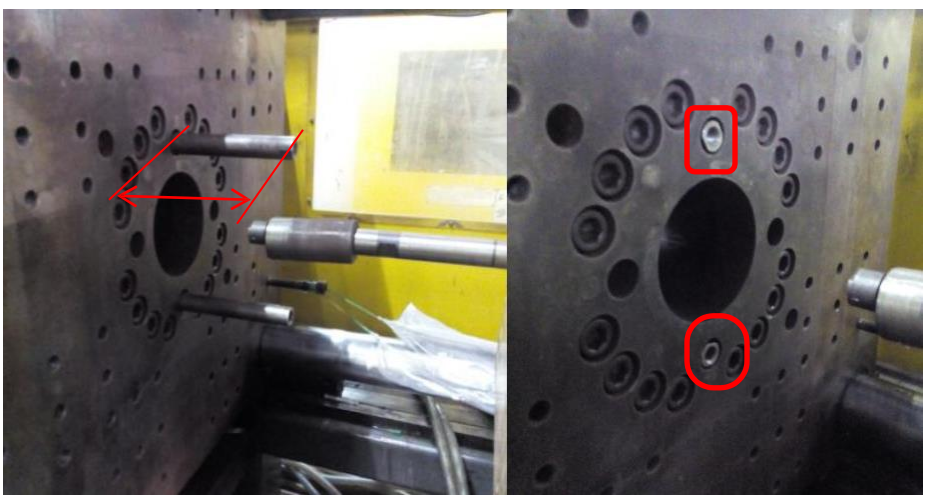

Quick Method for replacing ejector axis belt:-

Follow first step -1 & step-2 (step-2 at next page shown) then

Dismantle only marked guide rod from both ejector plate and moving platen side only

Dismantle below piPictures marked M17 (dependn machine model) bolts from both side ejector plate and moving pon platen side and take out de rod.

this guide

Then make a square plate belt from machine and replace new belt.

re of the belt and removing co

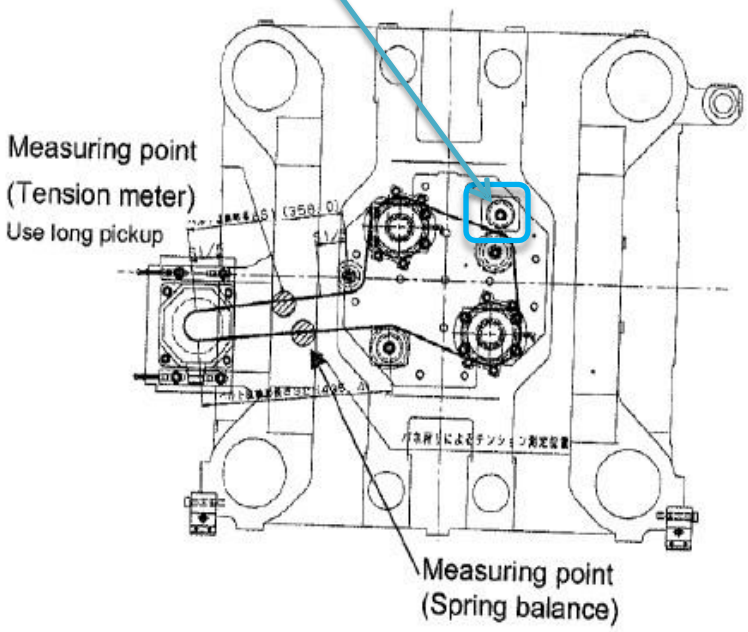

S-2000i300A(Ejector axis)

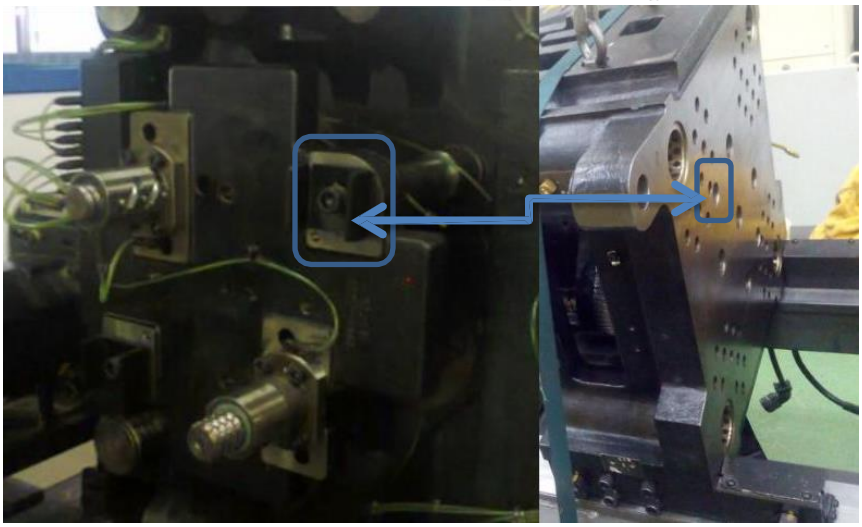

Traditional method of replacing ejector axis belt:-

Follow first Step-1 then

Step-2

Set the physically the A axis position at zero as shown on picture then again cross check to measure the physically the guide rod and moving platen gap with depth gauge

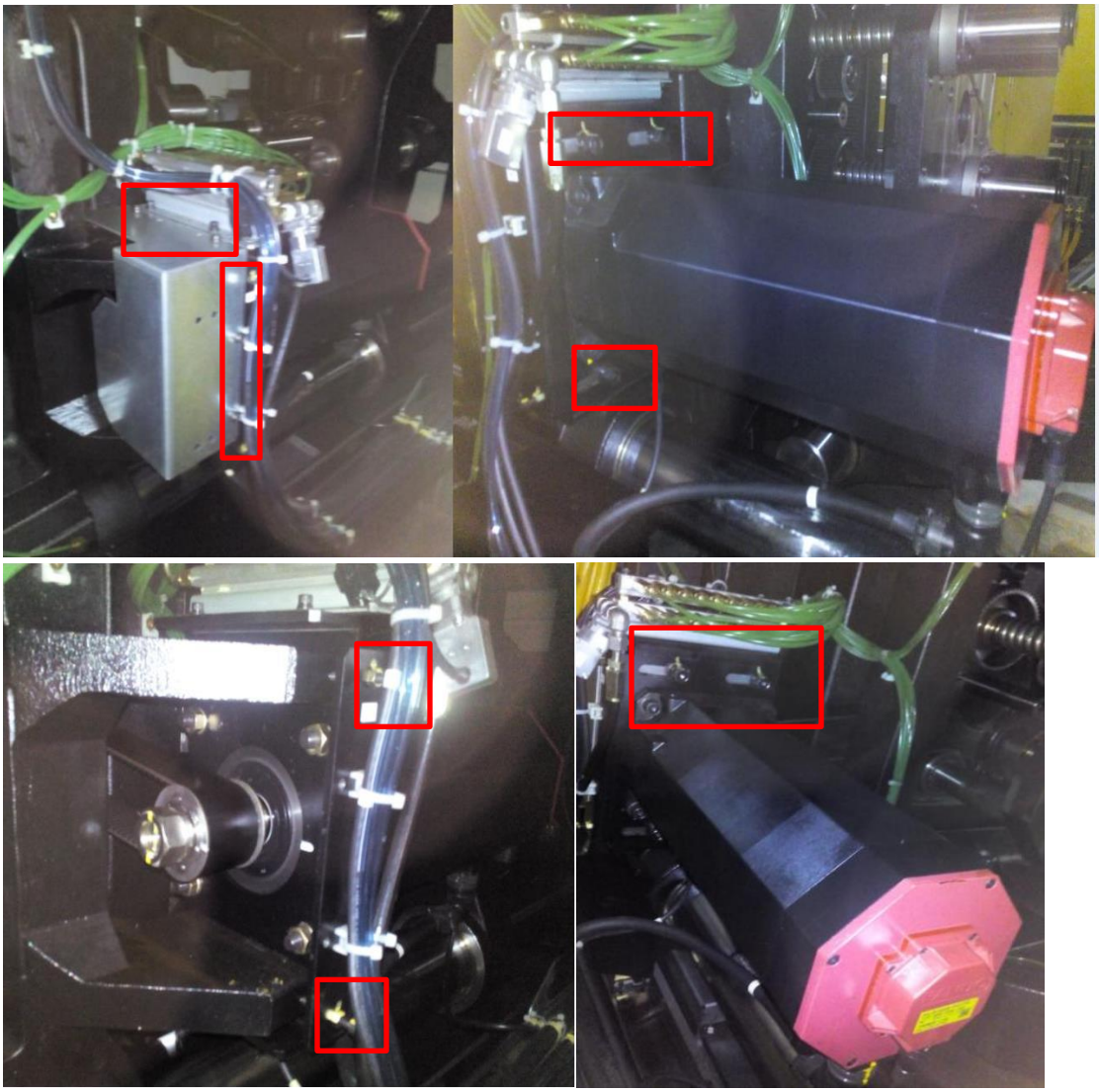

Step-3

a) First check the present ejector motor belt tension with tension meter
b) Then loosen the Ejector motor mounting bolts
c) Loosen and remove the ejector axis belt from motor pulley

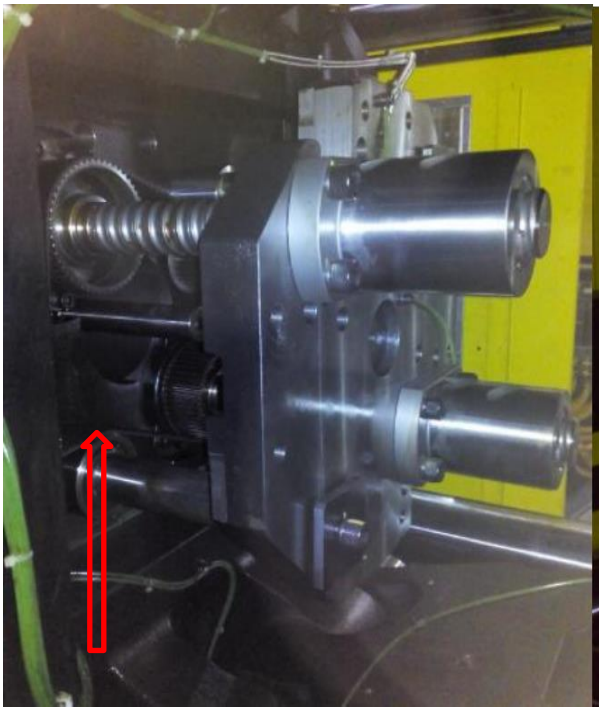

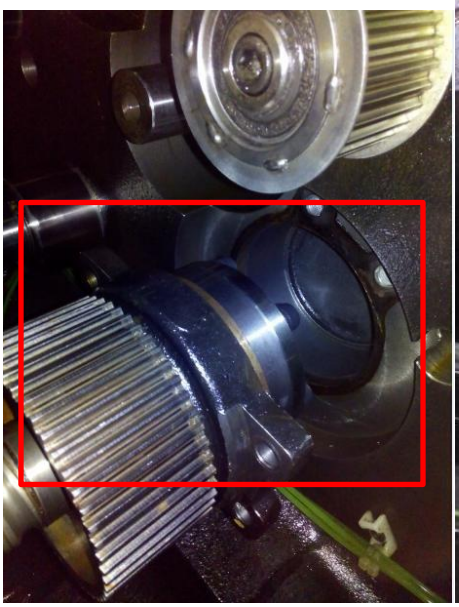

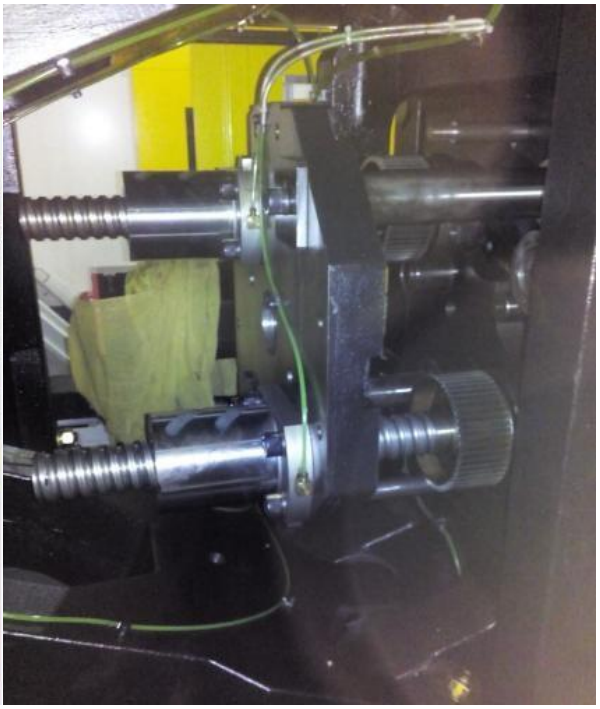

Step-4

a) First physically marked the ejector balls crew position with marker
b) Loosen the ejector balls screw mounting bolts of M12 with moving platen 4 no. each ball screw
c) Move the balls screw outward manually
d) Remove the complete the ejector axis belt
e) Now insert the new ejector axis belt as same manner as previous belt
f) Fasten the M12 ejector both ball screw to moving platen with proper tools
g) set the required belt tension with tension meter

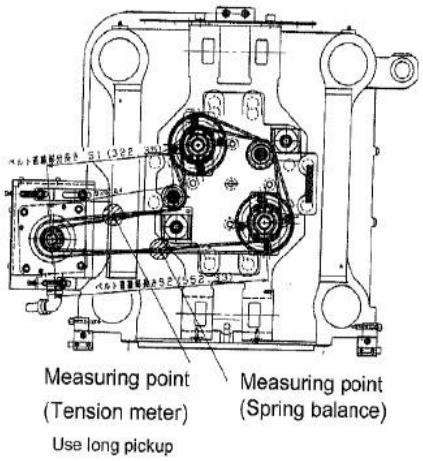

S-2000i150A (Ejector axis)

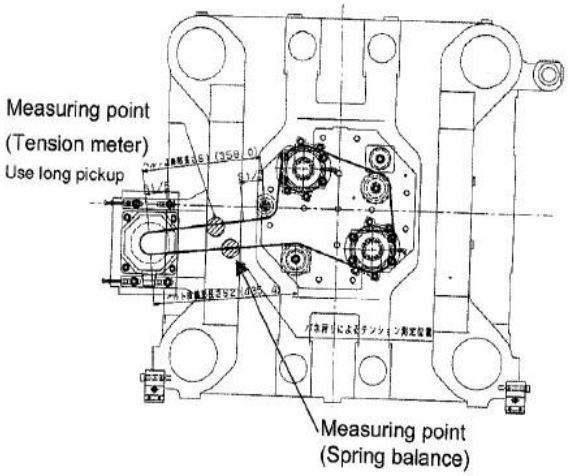

S-2000i300A(Ejector axis)

DRIVE UNIT SPECIFICATION (A07B-XXXX-XXXX)	LENGTH OF STRAIGHT AREA OF BELT	TOLERANCE OF FREQUENCY	TOLERANCE OF DEFLECTION	PUSHING FORCE OF SPRING BALANCE
	S(mm)	(Hz)	σ	(kgf)
1521-H003#STD,#DLP,#STDB	199.2	69 – 85	3.1	
1521-H003#HEF,#HEFB	282.9	63 – 77	4.4	1.4 – 2.0
3021-H003#STD,#STDB	351.2	51 – 62	5.5	2.2 – 3.3
3021-H003#HCC,#HCCB	364.2	45 – 55	5.7	2.7 – 4.1

Step-5-

a) Power On machine
b) Move the ejector axis so that ejector guide rod as shown in first picture for correct position
c) Set this value to zero position. As described in below procedure

STEP-6

Step 1: 1 revolution signal

Proceed to step 2 when 1 revolution signal is ON.
Perform the following operation when 1 revolution signal is OFF.

1. Push EMERGENCY STOP button.
2. Turn motor over 1 revolution.
3. Turn the control power OFF
4. Turn the control power ON with pushing both MENU group and SHIFT key.
5. Verify the 1 revolution signal turns to ON.

Step 2: Setting of zero position

1. Make sure the machine stops.
2. Make sure the ejector is at machine zero position.
3. Set ZERO SHIFT to 0.100 mm, then push the “EXECUTE” button.
4. ”Power must be OFF.” message is displayed.
5. Turn the control power OFF.

Re-zero shift point operation

In below picture one Rev.Signal is OFF

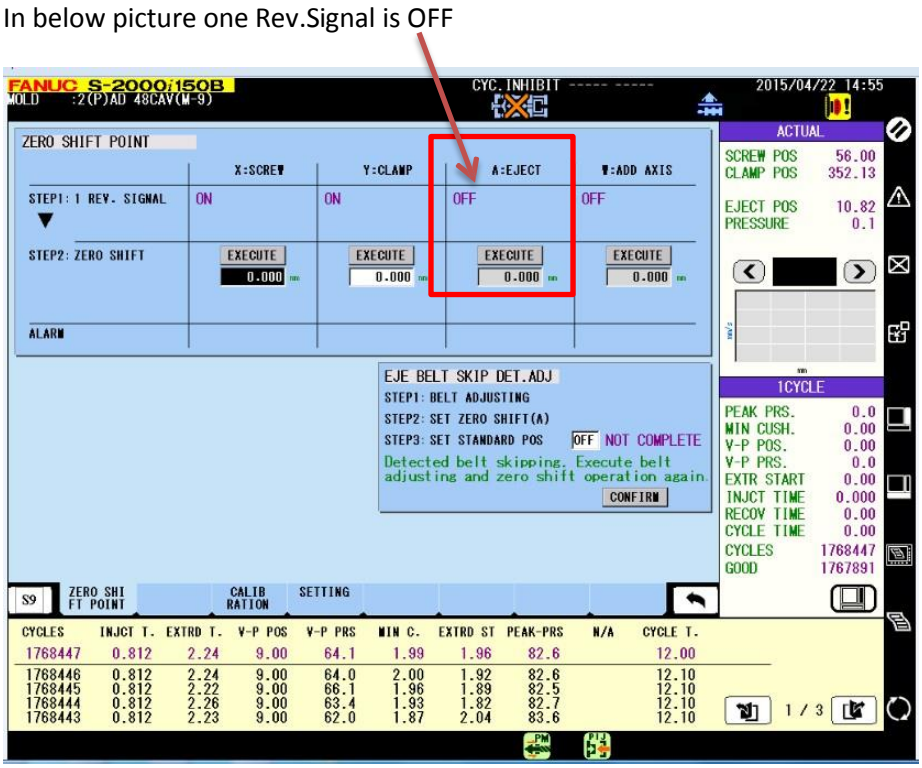

After as per procedure the one Rev Signal is now ON

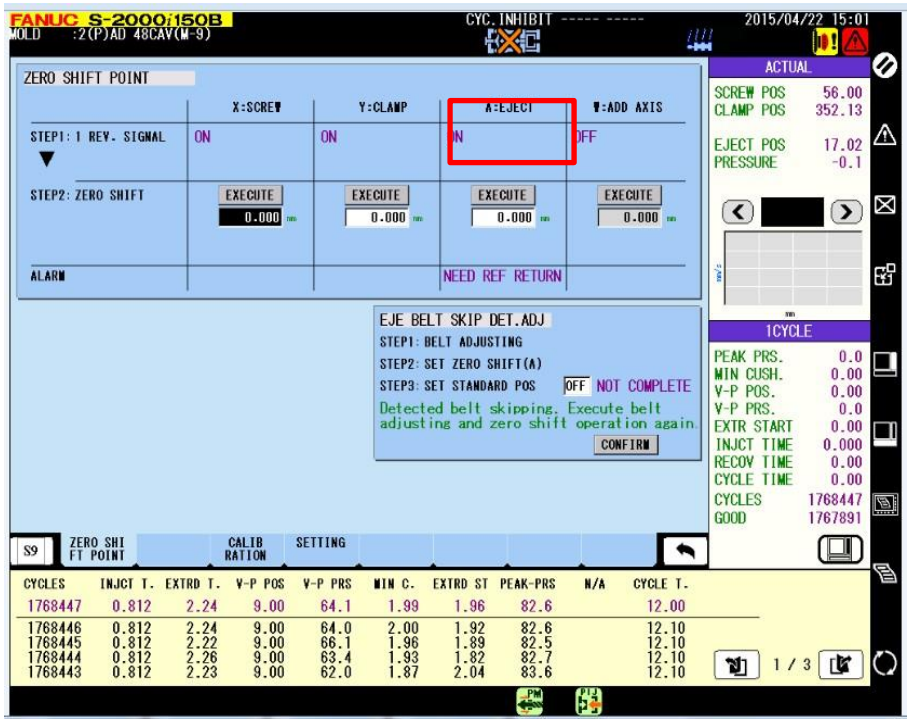

Press “EXECUITE” machine display “Power Must is OFF”

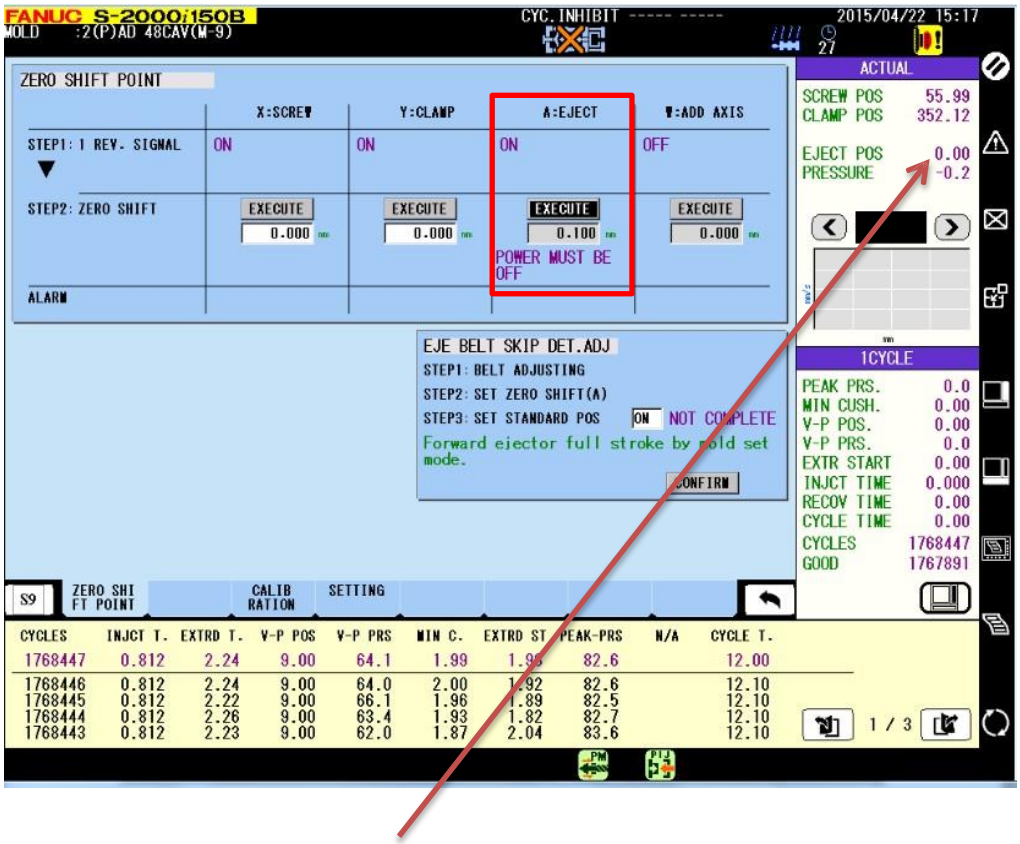

Switch OFF / ON the machine & “Ejector POS became zero”